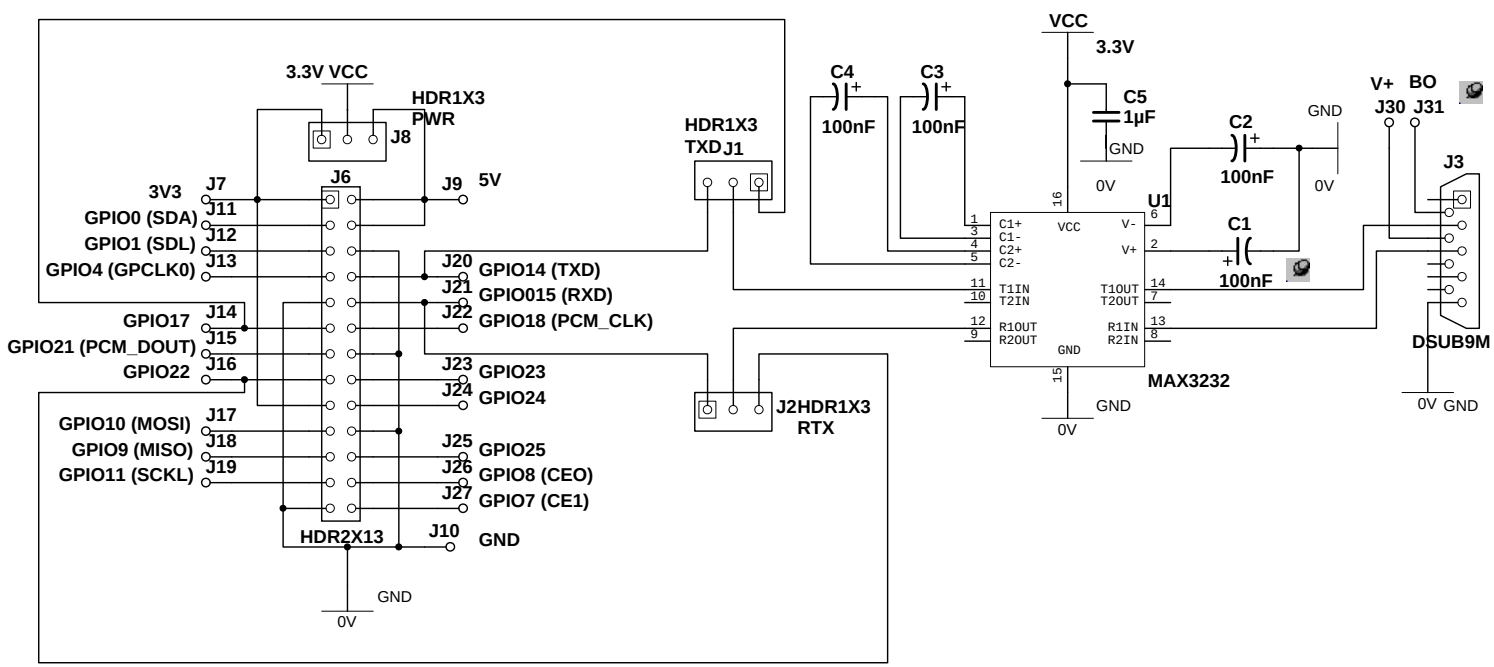
3.3V VCC
HDR1X3
PWR
J8
J6
3V3
J7
GPIO0 (SDA)
J11
GPIO1 (SDL)
J12
GPIO4 (GPCLK0)
J13
GPIO17
J14
GPIO21 (PCM_DOUT)
J15
GPIO22
J16
GPIO10 (MOSI)
J17
GPIO9 (MISO)
J18
GPIO11 (SCKL)
J19
HDR2X13
J9
5V
J20
GPIO14 (TXD)
J21
GPIO015 (RXD)
J22
GPIO18 (PCM_CLK)
J23
GPIO23
J24
GPIO24
J25
GPIO25
J26
GPIO8 (CEO)
J27
GPIO7 (CE1)
J10
GND
GND
0V
HDR1X3
TXD
J1
J2HDR1X3
RTX
C4
100nF
C3
100nF
VCC
3.3V
C5
1µF
GND
0V
C2
100nF
GND
0V
C1
100nF
U1
C1+
C1-
C2+
C2-
T1IN
T2IN
R1OUT
R2OUT
VCC
GND
V-
V+
T1OUT
T2OUT
R1IN
R2IN
MAX3232
GND
0V
V+
BO
J30
J31
J3
DSUB9M
0V
GND